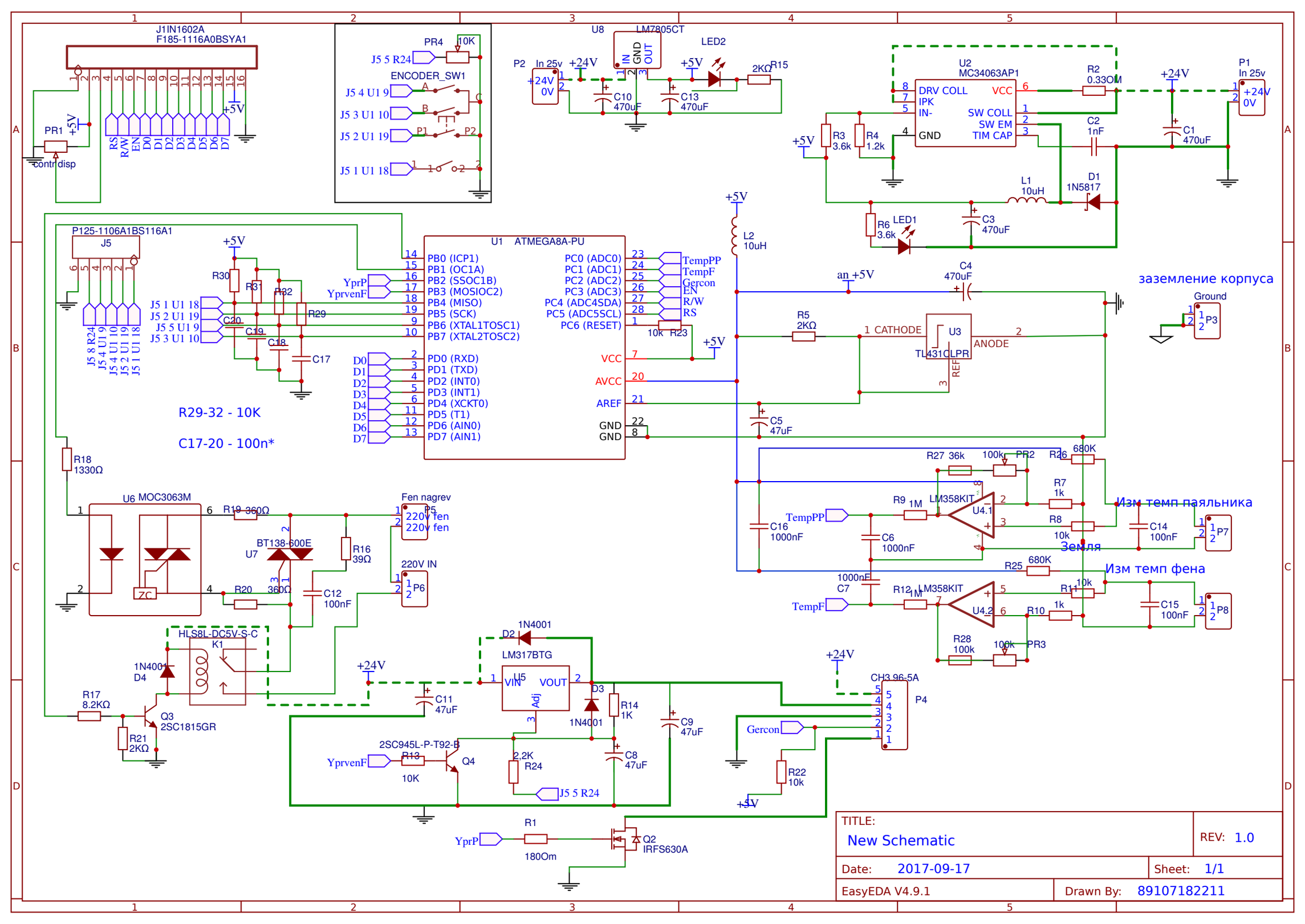
J1IN1602A
F185-1116A0BSYA1
RS R/W EN D0 D1 D2 D3 D4 D5 D6 D7
PR1
contr disp
PR4 10K
ENCODER_SW1
J5 5 R24
J5 4 U1 9
J5 3 U1 10
J5 2 U1 19
J5 1 U1 18
U8 LM7805CT
IN GND OUT
P2 In 25v
+24V 0V
C10 470uF
C13 470uF
LED2
2KΩ R15
U2 MC34063AP1
DRV COLL IPK IN-
VCC SW COLL SW EM TIM CAP
GND
R2 0.33OM
R3 3.6k
R4 1.2k
C2 1nF
C1 470uF
P1 In 25v
L1 10uH
D1 1N5817
R6 3.6k
LED1
C3 470uF
P125-1106A1BS116A1
J5
U1 ATMEGA8A-PU
PB0 (ICP1)
PB1 (OC1A)
PB2 (SSOC1B)
PB3 (MOSIOC2)
PB4 (MISO)
PB5 (SCK)
PB6 (XTAL1TOSC1)
PB7 (XTAL2TOSC2)
PD0 (RXD)
PD1 (TXD)
PD2 (INT0)
PD3 (INT1)
PD4 (XCKT0)
PD5 (T1)
PD6 (AIN0)
PD7 (AIN1)
PC0 (ADC0)
PC1 (ADC1)
PC2 (ADC2)
PC3 (ADC3)
PC4 (ADC4SDA)
PC5 (ADC5SCL)
PC6 (RESET)
TempPP
TempF
Gercon
EN
R/W
RS
10k R23
VCC
AVCC
AREF
GND
YprP
YprvenF
D0 D1 D2 D3 D4 D5 D6 D7
R30 R31 R32 R29
C20 C19 C18 C17
R29-32 - 10K
C17-20 - 100n*
L2 10uH
C4 470uF
R5 2KΩ
U3 TL431CLPR
1 CATHODE
ANODE
REF
C5 47uF
заземление корпуса
Ground
P3
R18 1330Ω
U6 MOC3063M
R19 360Ω
BT138-600E
U7
R16 39Ω
R20 360Ω
C12 100nF
ZC
Fen nagrev
P5
220v fen
220v fen
220V IN
P6
R27 36k
100k PR2
R26 680K
R7 1k
R8 10k
R9 1M
LM358KIT
U4.1
TempPP
C16 1000nF
C6 1000nF
Земля
Изм темп паяльника
C14 100nF
P7
R25 680K
1000nF C7
R12 1M
U4.2
TempF
R11 10k
R10 1k
Изм темп фена
C15 100nF
P8
R28 100k
100k PR3
HLS8L-DC5V-S-C
K1
1N4001 D4
R17 8.2KΩ
Q3 2SC1815GR
R21 2KΩ
1N4001 D2
LM317BTG
U5
VIN VOUT Adj
C11 47uF
D3
1N4001
R14 1K
C9 47uF
C8 47uF
2SC945L-P-T92-B
R13 10K
Q4
2.2K R24
J5 5 R24
CH3.96-5A
P4
Gercon
R22 10k
R1 180Om
Q2 IRFS630A
TITLE:
New Schematic
REV: 1.0
Date: 2017-09-17
Sheet: 1/1
EasyEDA V4.9.1
Drawn By: 89107182211